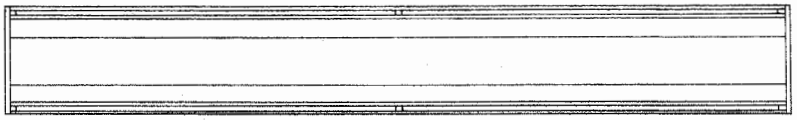

PLAN OF FEEDER

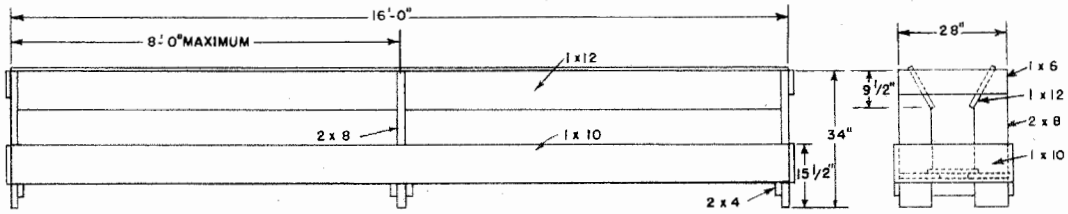

FRONT ELEVATION

END ELEVATION

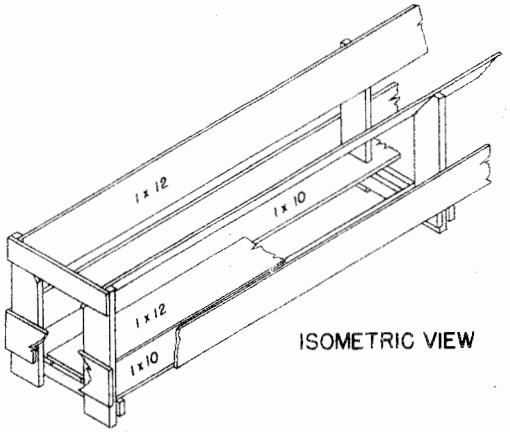

ISOMETRIC VIEW

DETAILS OF FEEDER
SCALE: 3/8"=1'-0"

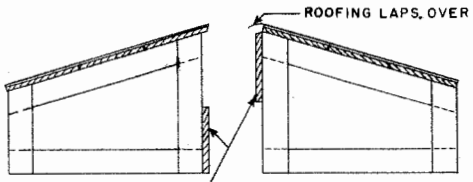

NOTE: CONSTRUCTION OF THE RIGHT SIDE UNIT AND THE LEFT SIDE UNIT DIFFERS SLIGHTLY

CROSS SECTION OF SHELTERS
SCALE: 1"= 1'-0"

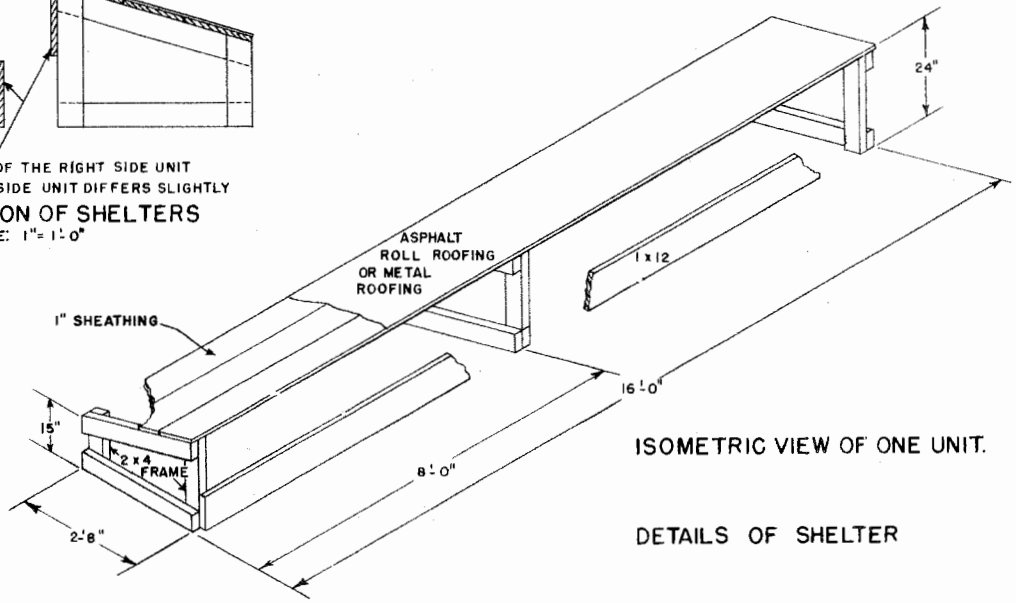

ISOMETRIC VIEW OF ONE UNIT.

DETAILS OF SHELTER

NOTE:

THIS FEEDER CAN BE MADE IN 12 AND 14 FOOT LENGTHS. THE SHORTER LENGTHS ARE MUCH STRONGER BECAUSE THE DISTANCE BETWEEN SUPPORTS IS LESS.

THIS FEEDER MAY BE USED AS A DIVIDER BETWEEN PENS BY ADDING A 1 x 6 BOARD IN THE CENTER TO PREVENT THE SHEEP FROM CRAWLING THROUGH.

DIMENSIONS OF MEMBERS SHOWN ARE BASED ON THE USE OF DRESSED LUMBER.

ALL WOOD IN CONTACT WITH THE GROUND TO BE TREATED WITH A NON-TOXIC PRESERVATIVE.

LSU AgCenter Research & Extension

SHEEP EQUIPMENT

UTAH '60	EX. 5905	SHEET 1 OF 1

Disclaimer

This site makes available conceptual plans that can be helpful in developing building layouts and selecting equipment for various agricultural applications. These plans do not necessarily represent the most current technology or construction codes. They are not construction plans and do not replace the need for competent design assistance in developing safe, legal and well-functioning agricultural building system. The LSU Agriculture Center, the Mid-West Plan Service, the United States Department of Agriculture and none of the cooperating land-grant universities warranty these plans.